VAEDER

MODULAR LIGHTING — INSTRUMENTS

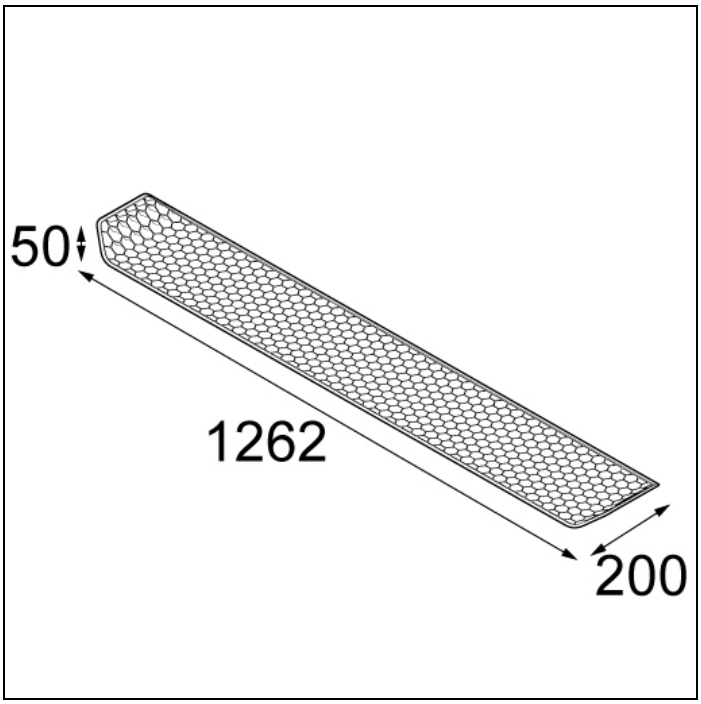

VAEDER LED DALI/PUSHDIM/1-10V GI

With a name derived from the English verb 'evade', it is clear from the start that Vaeder will be miles ahead of anything average. This fixture feels equally at home in an energy-efficient, ergonomic office environment and in a home office. Its characteristic honeycomb structure in combination with a wafer-thin diffuser minimizes glare, whilst Vaeder's ground-breaking LED technology results in an energy-efficient and high performance office fixture, compliant with the official EN 12464-1 standard.

	WARM WHITE 2700K / CRI 90+	WARM WHITE 3000K / CRI 90+	NEUTRAL WHITE 4000K / CRI 90+
black struc - black	14080048	14080148	14080248
black struc - white	14080072	14080172	14080272
donkey grey struc - black	14080075	14080175	14080275
donkey grey struc - white	14080074	14080174	14080274
white struc - black	14080029	14080129	14080229
white struc - white	14080073	14080173	14080273

Art. Nr.14080173

SPECIFICATIONS

Lamp	8x LED Line 4W
Gear / Transfo	LED gear incl.
Weight	4.2kg
Min. distance	0.1
Power supply	230V
IP	IP20
Glow wire test	650°
CRI	90
Lumen	2245 Lm
Efficacy	62 Lm/W
UGR	16
Adjustability	Not Applicable

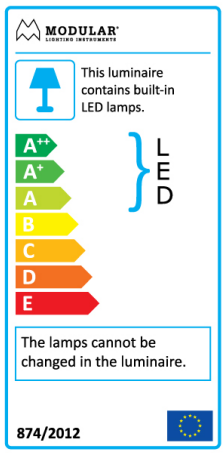

Available label
http://supermodular.com/assets/TYPE2.pdf

VAEDER LED DALI/PUSHDIM/1-10V GI

ACCESSORIES

HUE-MODULE

13190030	MODULAR CONNECTED 1-10V WHITE COMPONENT

HUE-BRIDGE

70000616	HUE BRIDGE EU
70000617	HUE BRIDGE UK

HUE-DEVICE

70000152	HUE DIMMER SWITCH
70000615	HUE TAP SWITCH
70008054	HUE SENSOR

Modular reserves the right to alter material, dimensions and characteristics without prior notice.
Lighting technology changes rapidly. Latest datasheet and documentation available on
www.supermodular.com.

19/10/2019 - ©2019 Modular Lighting Instruments